TECHTOP electric motors	**Model Number**	**RD1-RS-TF-56Y-4-B-C-.5-115|230-60**
	MFG PN	**SLF561/2Z4L**
	List Price	**--**

All data shown at HIGH voltage setting — Format: STD 1 Phase

Electrical Data		**General Data**	
Rated Motor Output Power	0.5 HP	Frame Size	56
Rated Motor Speed	1725 r/min	Enclosure	TEFC
Rated Motor Voltage (1 Phase)	115|230-60 Volts - HZ	Approximate Weight	--
Rated Motor Current	5.2/2.9-2.6 Amps	NEMA Design	L
Service Factor	1.15	IP Rating	55
KVA Code	K	Insulation Class	F
Nominal Efficiency	90 %	Tropicalization	YES
Nominal Power Factor	0.9 cosθ	Duty	Cont.
Full Load Torque Ft-Lb	2.02 Ft-Lb	Cable Entry	1.25
Temp Rise @ Full Load °C	59.7	Feet Removable	YES
Efficiency Level	IE3 - NEMA Premium	Double Drilled	NO
		Rated Ambient (°C)	40
		Rated Altitude (M)	1000
		Coating	7024 - Graphite Grey
		Start Capacitor (µF / V / Qty)	--
		Run Capacitor (µF / V / Qty)	--
		Centrifugal Switch Type	--

Load Data	**RPM**	**Trq %FL**	**Current Amps**
Locked Rotor	-	271	18.47
Breakdown	-	340	-
Pull Up	-	247	-
125% of FL	1733	-	3
75% of FL	1762	-	2.1
50% of FL	1775	-	1.72
No Load	--	-	1.35

Hazardous Location	**CLI/II Div2 Grp C,D/F,G**

Mechanical Data	
Bearing DE Side	6204 2RZ
Bearing NDE Side	6203 2RZ
Moment of Inertia	-- kg.m2
Noise Level	Per NEMA dB (A)

CT VFD Range	--	**Loaded Torque Curves**	**--**
		P1 = INPUT POWER (KW), S = Slip (% of Sync RPM), η = Efficiency (%), cosϕ = Power Factor	

Certifications	UL	CSA	DOE
File Numbers	**323353**	**224693**	096A

Wiring Diagram	**RD1-56-145-Frame-wiringDiagram**

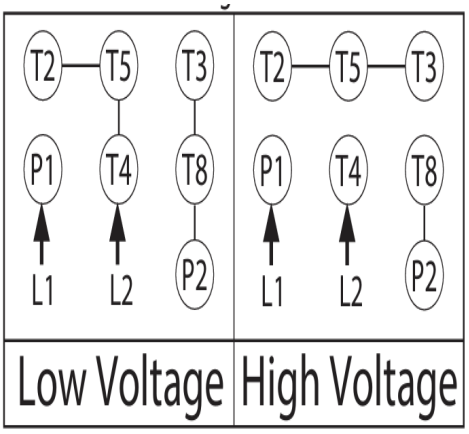

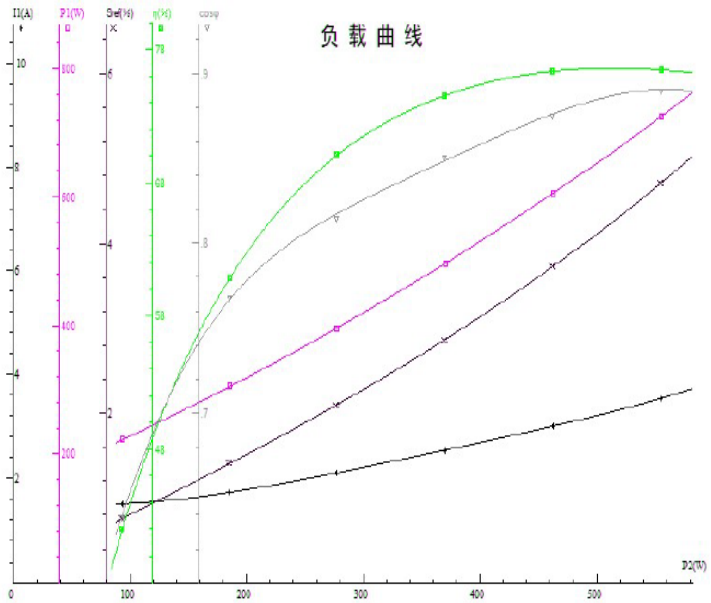

Model Number	RD1-RS-TF-56Y-4-B-C-.5-115|230-60
MFG PN	SLF561/2Z4L
List Price	--
Base Frame	RD-56Y-RS-TF

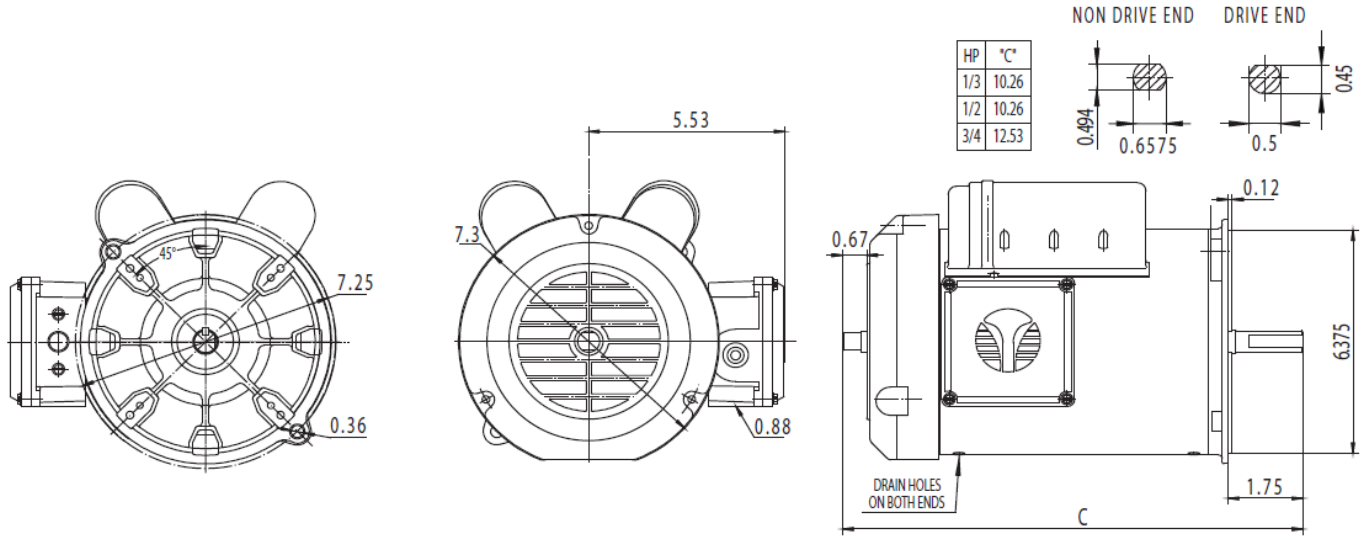

TECHTOP®		NEMA TEFC 56Y	
Drawing Number:	RD1-RS-TF-56Y	Issued Date:	6/24/15
Dimensions:	Inches		
Mounting:	Y-Flange	TEFC - Red Line NEMA High Torque Farm Duty Auger Motor Series	
Casing Material:	Rolled Steel		