TECHTOP electric motors	**Model Number**	**CB3-AL-TF-56HC-4-B-D-1.5-190|380-50**
	MFG PN	**T56H 1.5U4B**
	List Price	**--**

All data shown at HIGH voltage setting — Format STD 3 Phase

Electrical Data		**General Data**	
Rated Motor Output Power	1.5 HP	Frame Size	56
Rated Motor Speed	r/min	Enclosure	TEFC
Rated Motor Voltage (3 Phase)	190|380-50 Volts - HZ	Approximate Weight	30
Rated Motor Current	Amps	NEMA Design	B
Service Factor		IP Rating	55
KVA Code		Insulation Class	F
Nominal Efficiency	%	Tropicalization	YES
Nominal Power Factor	cosθ	Duty	Cont.
Full Load Torque Ft-Lb	Ft-Lb	Cable Entry	1.25
Temp Rise @ Full Load °C	34.1	Feet Removable	YES
Efficiency Level	IE3 - NEMA Premium	Double Drilled	NO

Load Data	**RPM**	**Trq %FL**	**Current Amps**
Locked Rotor	-		
Breakdown	-		-
Pull Up	-		-
125% of FL		-	
75% of FL		-	
50% of FL		-	
No Load		-	
Hazardous Location	**Class 1, Div2 Grp A,B,C, D**		

Rated Ambient (°C)	40
Rated Altitude (M)	1000
Coating	7024 - Graphite Grey
Shaft Grounding	YES
Brake Voltage (DC)	
Brake Torque (N-M)	

Mechanical Data	
Bearing DE Side	6205 ZZ
Bearing NDE Side	6205 ZZ
Moment of Inertia	kg.m2
Noise Level	Per NEMA dB (A)

CT VFD Range	--
Loaded Torque Curves	**--**

P1 = INPUT POWER (KW), S = Slip (% of Sync RPM), η = Efficiency (%), cosϕ = Power Factor

Certifications	UL	CSA	DOE
File Numbers	**323353**	**224693**	096A

Wiring Diagram **3PH 9 Lead Dual Voltage**

3 Phase - YY/Y - 9 Lead

4,1 Blue / 5,2 White / 6,3 Org / 7 Yl / 8 Blk / 9 RD

Cast Iron- 1,2,3 Top - 4,5,6,7,8,9 Bottom

Aluminum - 4,5,6,8,9 Top - 1,2,3,7 Bottom

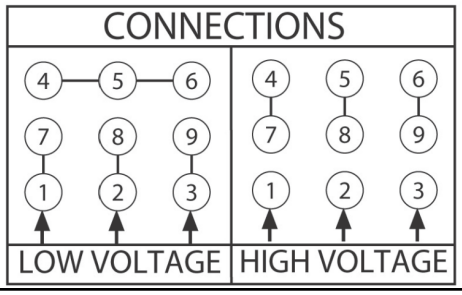

Model Number	CB3-AL-TF-56HC-4-B-D-1.5-190|380-50
MFG PN	T56H 1.5U4B
List Price	--
Base Frame	CB-56HC-AL-TF

FRAME: 56HC	HP:	RPM:	PHASE: 3	VOLT: 230/460V	ENCL: TEFC	FREQ: 60 Hz	FLA:	LRA:

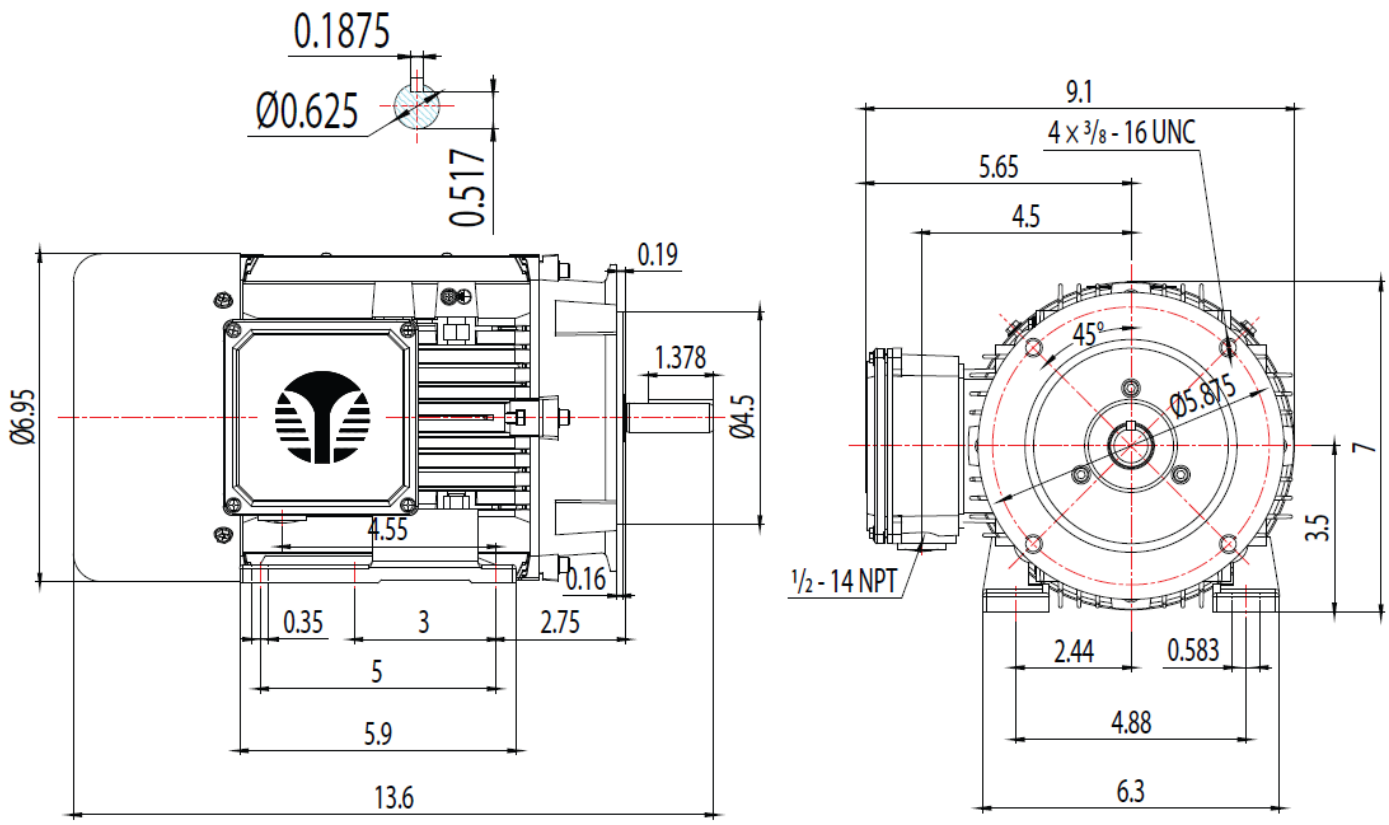

MODEL NUMBER:	REV.	BY	DATE	CHANGES
CB3-AL-TF-56HC	1			
	2			
MFG PN:	3			
	4			
	5			
	6			
	7			

MATERIAL: ALUMINUM
UNITS: INCH BY: SSEE
DRAWN: 1/3/2019
WWW.TECHTOP.COM

Techtop Industries -2815 Colonnades Court - Peachtree Corners, GA 30071 - Phone: (678) 436-5540