TECHTOP electric motors	**Model Number**	**CB3-AL-TF-56C-2-B-D-1-190|380-50**
	MFG PN	**T56 1U2B**
	List Price	**--**

All data shown at HIGH voltage setting — Format STD 3 Phase

Electrical Data		**General Data**	
Rated Motor Output Power	1 HP	Frame Size	56
Rated Motor Speed	2850 r/min	Enclosure	TEFC
Rated Motor Voltage (3 Phase)	190|380-50 Volts - HZ	Approximate Weight	18
Rated Motor Current	3.48/1.74 Amps	NEMA Design	B
Service Factor	1	IP Rating	55
KVA Code	G	Insulation Class	F
Nominal Efficiency	77 %	Tropicalization	YES
Nominal Power Factor	cosθ	Duty	Cont.
Full Load Torque Ft-Lb	Ft-Lb	Cable Entry	1.25
Temp Rise @ Full Load °C		Feet Removable	YES
Efficiency Level	IE3 - NEMA Premium	Double Drilled	NO
		Rated Ambient (°C)	40
		Rated Altitude (M)	1000
		Coating	7024 - Graphite Grey
		Shaft Grounding	YES
		Brake Voltage (DC)	
		Brake Torque (N-M)	
		Mechanical Data	
		Bearing DE Side	6204 ZZ
		Bearing NDE Side	6204 ZZ
		Moment of Inertia	kg.m2
		Noise Level	Per NEMA dB (A)

Load Data	**RPM**	**Trq %FL**	**Current Amps**
Locked Rotor	-		
Breakdown	-		-
Pull Up	-		-
125% of FL		-	
75% of FL		-	
50% of FL		-	
No Load		-	

Hazardous Location	**Class 1, Div2 Grp A,B,C, D**

CT VFD Range	--	**Loaded Torque Curves**	**--**
		P1 = INPUT POWER (KW), S = Slip (% of Sync RPM), η = Efficiency (%), cosϕ = Power Factor	

Certifications	UL	CSA	DOE
File Numbers	**323353**	**224693**	096A

Wiring Diagram	**3PH 9 Lead Dual Voltage**

3 Phase - YY/Y - 9 Lead

4,1 Blue / 5,2 White / 6,3 Org / 7 Yl / 8 Blk / 9 RD

Cast Iron- 1,2,3 Top - 4,5,6,7,8,9 Bottom

Aluminum - 4,5,6,8,9 Top - 1,2,3,7 Bottom

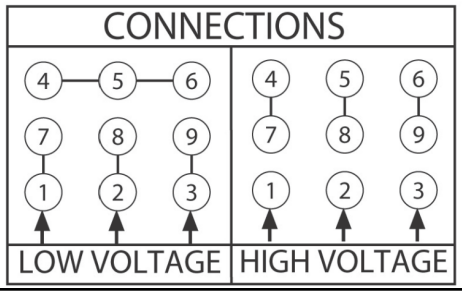

Model Number	CB3-AL-TF-56C-2-B-D-1-190|380-50
MFG PN	T56 1U2B
List Price	--
Base Frame	CB-56C-AL-TF

FRAME: 56C	HP:	RPM:	PHASE: 3	VOLT: 230/460V	ENCL: TEFC	FREQ: 60 Hz	FLA:	LRA:

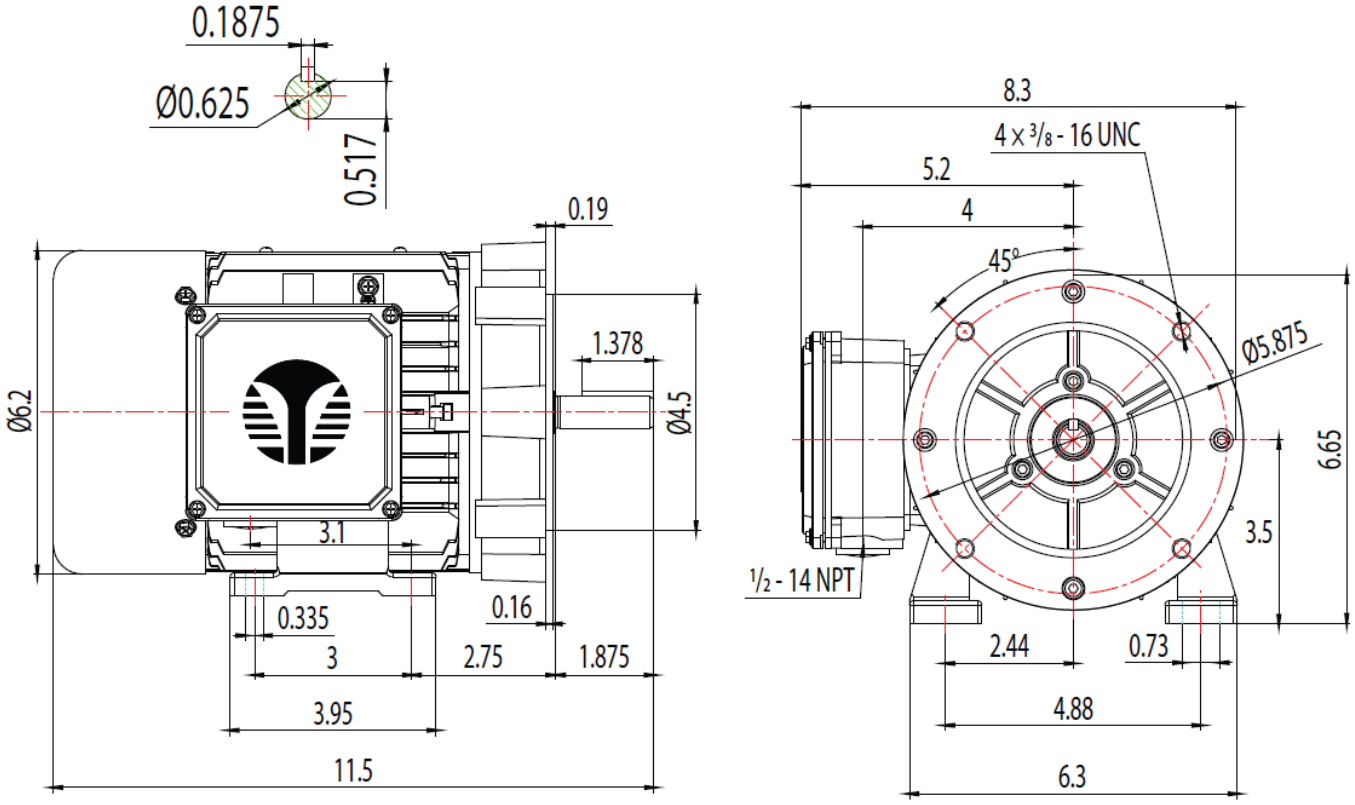

MODEL NUMBER:	REV.	BY	DATE	CHANGES
CB3-AL-TF-56C	1			
MFG PN:	2			
	3			
	4			
	5			
	6			
	7			

MATERIAL: ALUMINUM
UNITS: INCH BY: SSEE
DRAWN: 1/3/2019
WWW.TECHTOP.COM

Techtop Industries -2815 Colonnades Court - Peachtree Corners, GA 30071 - Phone: (678) 436-5540